Package leaflet: Information for the user

Fymskina 45 mg solution for injection in pre-filled syringe
ustekinumab

▼ This medicine is subject to additional monitoring. This will allow quick identification of new safety information. You can help by reporting any side effects you may get. See the end of section 4 for how to report side effects.

Read all of this leaflet carefully before you start using this medicine because it contains important information for you.

This leaflet has been written for the person taking the medicine. If you are the parent or caregiver who will give Fymskina to a child, please read this information carefully.

- Keep this leaflet. You may need to read it again.
- If you have any further questions, ask your doctor or pharmacist.
- This medicine has been prescribed for you only. Do not pass it on to others. It may harm them, even if their signs of illness are the same as yours.
- If you get any side effects, talk to your doctor or pharmacist. This includes any possible side effects not listed in this leaflet. See section 4.

What is in this leaflet

1. What Fymskina is and what it is used for
2. What you need to know before you use Fymskina
3. How to use Fymskina
4. Possible side effects
5. How to store Fymskina
6. Contents of the pack and other information

1. What Fymskina is and what it is used for

What Fymskina is
Fymskina contains the active substance ‘ustekinumab’, a monoclonal antibody. Monoclonal antibodies are proteins that recognise and bind specifically to certain proteins in the body.

Fymskina belongs to a group of medicines called ‘immunosuppressants’. These medicines work by weakening part of the immune system.

What Fymskina is used for
Fymskina is used to treat the following inflammatory diseases:
- Plaque psoriasis - in adults and children aged 6 years and older
- Psoriatic arthritis - in adults
- Moderate to severe Crohn’s disease - in adults and children who weigh at least 40 kg

Plaque psoriasis
Plaque psoriasis is a skin condition that causes inflammation affecting the skin and nails. Fymskina will reduce the inflammation and other signs of the disease.

Fymskina is used in adults with moderate to severe plaque psoriasis, who cannot use ciclosporin, methotrexate or phototherapy, or where these treatments did not work.

Fymskina is used in children and adolescents aged 6 years and older with moderate to severe plaque psoriasis who are unable to tolerate phototherapy or other systemic therapies or where these treatments did not work.

Psoriatic arthritis

Psoriatic arthritis is an inflammatory disease of the joints, usually accompanied by psoriasis. If you have active psoriatic arthritis you will first be given other medicines. If you do not respond well enough to these medicines, you may be given Fymskina to:
- Reduce the signs and symptoms of your disease.
- Improve your physical function.
- Slow down the damage to your joints.

Crohn's disease
Crohn's disease is an inflammatory disease of the bowel. If you have Crohn's disease you will first be given other medicines. If you do not respond well enough or are intolerant to these medicines, you may be given Fymskina to reduce the signs and symptoms of your disease.

2. What you need to know before you use Fymskina

Do not use Fymskina
- **If you are allergic to ustekinumab** or any of the other ingredients of this medicine (listed in section 6).
- **If you have an active infection** which your doctor thinks is important.

If you are not sure if any of the above applies to you, talk to your doctor or pharmacist before using Fymskina.

Warnings and precautions
Talk to your doctor or pharmacist before using Fymskina. Your doctor will check how well you are before each treatment. Make sure you tell your doctor about any illness you have before each treatment. Also tell your doctor if you have recently been near anyone who might have tuberculosis. Your doctor will examine you and do a test for tuberculosis, before you have Fymskina. If your doctor thinks you are at risk of tuberculosis, you may be given medicines to treat it.

Look out for serious side effects
Fymskina can cause serious side effects, including allergic reactions and infections. You must look out for certain signs of illness while you are taking Fymskina. See 'Serious side effects' in section 4 for a full list of these side effects.

Before you use Fymskina tell your doctor:
- **If you ever had an allergic reaction to ustekinumab**. Ask your doctor if you are not sure.
- **If you have ever had any type of cancer** – this is because immunosuppressants like Fymskina weaken part of the immune system. This may increase the risk of cancer.
- **If you have been treated for psoriasis with other biologic medicines (a medicine produced from a biological source and usually given by injection)** – the risk of cancer may be higher.
- **If you have or have had a recent infection.**
- **If you have any new or changing lesions** within psoriasis areas or on normal skin.
- **If you have ever had an allergic reaction to Fymskina injection** – see 'Look out for serious side effects' in section 4 for the signs of an allergic reaction.
- **If you are having any other treatment for psoriasis and/or psoriatic arthritis** – such as another immunosuppressant or phototherapy (when your body is treated with a type of ultraviolet (UV) light). These treatments may also weaken part of the immune system. Using these therapies together with Fymskina has not been studied. However it is possible it may increase the chance of diseases related to a weaker immune system.
- **If you are having or have ever had injections to treat allergies** – it is not known if Fymskina may affect these.
- **If you are 65 years of age or over** – you may be more likely to get infections.

If you are not sure if any of the above applies to you, talk to your doctor or pharmacist before using Fymskina.

Some patients have experienced lupus-like reactions including skin lupus or lupus-like syndrome during treatment with ustekinumab. Talk to your doctor right away if you experience a red, raised, scaly rash sometimes with a darker border, in areas of the skin that are exposed to the sun or with joint pains.

Heart attack and strokes
Heart attack and strokes have been observed in a study in patients with psoriasis treated with ustekinumab. Your doctor will regularly check your risk factors for heart disease and stroke in order to ensure that they are appropriately treated. Seek medical attention right away if you develop chest pain, weakness or abnormal sensation on one side of your body, facial droop, or speech or visual abnormalities.

Children and adolescents
Fymskina is not recommended for use in children with psoriasis under 6 years of age, children with Crohn's disease who weigh less than 40 kg or for use in children under 18 years of age with psoriatic arthritis, because it has not been studied in this age group.

Other medicines, vaccines and Fymskina
Tell your doctor or pharmacist:
- If you are taking, have recently taken or might take any other medicines.
- If you have recently had or are going to have a vaccination. Some types of vaccines (live vaccines) should not be given while using Fymskina.
- If you received Fymskina while pregnant, tell your baby's doctor about your Fymskina treatment before the baby receives any vaccine, including live vaccines, such as the BCG vaccine (used to prevent tuberculosis). Live vaccines are not recommended for your baby in the first twelve months after birth if you received Fymskina during the pregnancy unless your baby's doctor recommends otherwise.

Pregnancy and breast-feeding
- If you are pregnant, think you may be pregnant or are planning to have a baby, ask your doctor for advice before taking this medicine.
- A higher risk of birth defects has not been seen in babies exposed to ustekinumab in the womb. However, there is limited experience with ustekinumab in pregnant women. It is therefore preferable to avoid the use of Fymskina in pregnancy.
- If you are a woman of childbearing potential, you are advised to avoid becoming pregnant and must use adequate contraception while using Fymskina and for at least 15 weeks after the last Fymskina treatment.
- Ustekinumab can pass across the placenta to the unborn baby. If you received Fymskina during your pregnancy, your baby may have a higher risk for getting an infection.
- It is important that you tell your baby's doctors and other health care professionals if you received Fymskina during your pregnancy before the baby receives any vaccine. Live vaccines such as the BCG vaccine (used to prevent tuberculosis) are not recommended for your baby in the first twelve months after birth if you received Fymskina during the pregnancy unless your baby's doctor recommends otherwise.
- Ustekinumab may pass into breast milk in very small amounts. Talk to your doctor if you are breast-feeding or are planning to breast-feed. You and your doctor should decide if you should breast-feed or use Fymskina - do not do both.

Driving and using machines
Fymskina has no or negligible influence on the ability to drive and use machines.

Fymskina contains polysorbates
This medicine contains 0.02 mg of polysorbate 80 in each pre-filled syringe which is equivalent to 0.04 mg/ml. Polysorbates may cause allergic reactions. Tell your doctor if you have any known allergies.

3. How to use Fymskina

Fymskina is intended for use under the guidance and supervision of a doctor experienced in treating conditions for which Fymskina is intended.
Always use this medicine exactly as your doctor has told you. Check with your doctor if you are not sure. Talk to your doctor about when you will have your injections and follow-up appointments.

How much Fymskina is given
Your doctor will decide how much Fymskina you need to use and for how long.

Adults aged 18 years or older
Psoriasis or Psoriatic Arthritis
- The recommended starting dose is 45 mg Fymskina. Patients who weigh more than 100 kilograms (kg) may start on a dose of 90 mg instead of 45 mg.
- After the starting dose, you will have the next dose 4 weeks later, and then every 12 weeks. The following doses are usually the same as the starting dose.

Crohn's disease
- During treatment, the first dose of approximately 6 mg/kg Fymskina will be given by your doctor through a drip in a vein in your arm (intravenous infusion). After the starting dose, you will receive the next dose of 90 mg Fymskina after 8 weeks, then every 12 weeks thereafter by an injection under the skin ('subcutaneously').
- In some patients, after the first injection under the skin, 90 mg Fymskina may be given every 8 weeks. Your doctor will decide when you should receive your next dose.

Children and adolescents aged 6 years or older
Psoriasis
- The doctor will work out the right dose for you, including the amount (volume) of Fymskina to be injected to give the right dose. The right dose for you will depend on your body weight at the time each dose is given.
- If you weigh less than 60 kg, there is no dosage form for Fymskina for children below 60 kg body weight, therefore other ustekinumab products should be used.
- If you weigh 60 kg to 100 kg, the recommended dose is 45 mg Fymskina.
- If you weigh more than 100 kg, the recommended dose is 90 mg Fymskina.
- After the starting dose, you will have the next dose 4 weeks later, and then every 12 weeks.

Children who weigh at least 40 kg
Crohn's disease
- During treatment, the first dose of approximately 6 mg/kg Fymskina will be given by your doctor through a drip in a vein in your arm (intravenous infusion). After the starting dose, you will receive the next dose of 90 mg Fymskina after 8 weeks, then every 12 weeks thereafter by an injection under the skin ('subcutaneously').
- In some patients, after the first injection under the skin, 90 mg Fymskina may be given every 8 weeks. Your doctor will decide when you should receive your next dose.

How Fymskina is given
- Fymskina is given as an injection under the skin ('subcutaneously'). At the start of your treatment, medical or nursing staff may inject Fymskina.
- However, you and your doctor may decide that you may inject Fymskina yourself. In this case you will get training on how to inject Fymskina yourself. In children 6 years and older, it is recommended that Fymskina be administered by a healthcare provider or a caregiver after proper training.
- For instructions on how to inject Fymskina, see 'Instructions for administration' at the end of this leaflet.

Talk to your doctor if you have any questions about giving yourself an injection.

If you use more Fymskina than you should
If you have used or been given too much Fymskina, talk to a doctor or pharmacist straight away. Always have the outer carton of the medicine with you, even if it is empty.

If you forget to use Fymskina
If you forget a dose, contact your doctor or pharmacist. Do not take a double dose to make up for a forgotten dose.

If you stop using Fymskina
It is not dangerous to stop using Fymskina. However, if you stop, your symptoms may come back. If you have any further questions on the use of this medicine, ask your doctor or pharmacist.

4. Possible side effects

Like all medicines, this medicine can cause side effects, although not everybody gets them.

Serious side effects
Some patients may have serious side effects that may need urgent treatment.

Allergic reactions – these may need urgent treatment. Tell your doctor or get emergency medical help straight away if you notice any of the following signs.
- Serious allergic reactions ('anaphylaxis') are rare in people taking ustekinumab products (may affect up to 1 in 1,000 people). Signs include:
  - difficulty breathing or swallowing
  - low blood pressure, which can cause dizziness or light-headedness
  - swelling of the face, lips, mouth or throat.
- Common signs of an allergic reaction include skin rash and hives (these may affect up to 1 in 100 people).

In rare cases, allergic lung reactions and lung inflammation have been reported in patients who receive ustekinumab. Tell your doctor right away if you develop symptoms such as cough, shortness of breath, and fever.

If you have a serious allergic reaction, your doctor may decide that you should not use Fymskina again.

Infections – these may need urgent treatment. Tell your doctor straight away if you notice any of the following signs.

- Infections of the nose or throat and common cold are common (may affect up to 1 in 10 people)
- Infections of the chest are uncommon (may affect up to 1 in 100 people)
- Inflammation of tissue under the skin ('cellulitis') is uncommon (may affect up to 1 in 100 people)
- Shingles (a type of painful rash with blisters) are uncommon (may affect up to 1 in 100 people)

Fymskina may make you less able to fight infections. Some infections could become serious and may include infections caused by viruses, fungi, bacteria (including tuberculosis), or parasites, including infections that mainly occur in people with a weakened immune system (opportunistic infections). Opportunistic infections of the brain (encephalitis, meningitis), lungs, and eye have been reported in patients receiving treatment with ustekinumab.

You must look out for signs of infection while you are using Fymskina. These include:
- fever, flu-like symptoms, night sweats, weight loss
- feeling tired or short of breath; cough which will not go away
- warm, red and painful skin, or a painful skin rash with blisters

- burning when passing water
- diarrhoea
- visual disturbance or vision loss
- headache, neck stiffness, light sensitivity, nausea or confusion.

Tell your doctor straight away if you notice any of these signs of infection. These may be signs of infections such as chest infections, skin infections, shingles or opportunistic infections that could have serious complications. Tell your doctor if you have any kind of infection that will not go away or keeps coming back. Your doctor may decide that you should not use Fymskina until the infection goes away. Also tell your doctor if you have any open cuts or sores as they might get infected.

Shedding of skin – increase in redness and shedding of skin over a larger area of the body may be symptoms of erythrodermic psoriasis or exfoliative dermatitis, which are serious skin conditions. You should tell your doctor straight away if you notice any of these signs.

Other side effects

Common side effects (may affect up to 1 in 10 people)**:**
- Diarrhoea
- Nausea
- Vomiting
- Feeling tired
- Feeling dizzy
- Headache
- Itching ('pruritus')
- Back, muscle or joint pain
- Sore throat
- Redness and pain where the injection is given
- Sinus infection

Uncommon side effects (may affect up to 1 in 100 people)**:**
- Tooth infections
- Vaginal yeast infection
- Depression
- Blocked or stuffy nose
- Bleeding, bruising, hardness, swelling and itching where the injection is given
- Feeling weak
- Drooping eyelid and sagging muscles on one side of the face ('facial palsy' or 'Bell's palsy'), which is usually temporary
- A change in psoriasis with redness and new tiny, yellow or white skin blisters, sometimes accompanied by fever (pustular psoriasis)
- Peeling of the skin (skin exfoliation)
- Acne

Rare side effects (may affect up to 1 in 1000 people)
- Redness and shedding of skin over a larger area of the body, which may be itchy or painful (exfoliative dermatitis). Similar symptoms sometimes develop as a natural change in the type of psoriasis symptoms (erythrodermic psoriasis)
- Inflammation of small blood vessels, which can lead to a skin rash with small red or purple bumps, fever or joint pain (vasculitis)

Very rare side effects (may affect up to 1 in 10,000 people)
- Blistering of the skin that may be red, itchy, and painful (Bullous pemphigoid).
- Skin lupus or lupus-like syndrome (red, raised scaly rash on areas of the skin exposed to the sun possibly with joint pains).

Reporting of side effects
If you get any side effects, talk to your doctor or pharmacist. This includes any possible side effects not listed in this leaflet. You can also report side effects directly via the national reporting system listed in Appendix V. By reporting side effects you can help provide more information on the safety of this medicine.

5. How to store Fymskina

- Keep this medicine out of the sight and reach of children.
- Store in a refrigerator (2°C–8°C). Do not freeze.
- Keep the pre-filled syringe in the outer carton in order to protect from light.
- If needed, individual Fymskina pre-filled syringes may also be stored at room temperature up to 30°C for a maximum single period of up to 30 days in the original carton in order to protect from light. Record the date when the pre-filled syringe is first removed from the refrigerator in the space provided on the outer carton. At any time before the end of this period, the product can be put back in the refrigerator once and kept there until the expiry date. Discard the pre-filled syringe if not used after the maximum period of 30 days at room temperature storage or by the original expiry date, whichever is earlier.
- Do not shake Fymskina pre-filled syringes. Prolonged vigorous shaking may damage the medicine.

Do not use this medicine:
- After the expiry date which is stated on the label and the carton after 'EXP'. The expiry date refers to the last day of that month.
- If the liquid is discoloured, cloudy or you can see other foreign particles floating in it (see section 6 'What Fymskina looks like and contents of the pack').
- If you know, or think that it may have been exposed to extreme temperatures (such as accidentally frozen or heated).
- If the product has been shaken vigorously.

Fymskina is for single use only. Any unused product remaining in the syringe should be thrown away. Do not throw away any medicines via wastewater or household waste. Ask your pharmacist how to throw away medicines you no longer use. These measures will help protect the environment.

6. Contents of the pack and other information

What Fymskina contains
- The active substance is ustekinumab. Each pre-filled syringe contains 45 mg ustekinumab in 0.5 mL.
- The other ingredients are L-histidine, polysorbate 80 (E 433), sucrose, water for injections and hydrochloric acid (to adjust pH).

What Fymskina looks like and contents of the pack
Fymskina is a clear to slightly opalescent, colourless to slightly brown-yellow solution for injection. It is supplied as a carton pack containing 1 single-dose, glass 1 mL pre-filled syringe. Each pre-filled syringe contains 45 mg ustekinumab in 0.5 mL of solution for injection.

Marketing Authorisation Holder and Manufacturer
Formycon AG
Fraunhoferstraße 15
82152 Martinsried/Planegg
Germany

For any information about this medicine, please contact the local representative of the Marketing Authorisation Holder:

BE / BG / CZ / DK / EE / IE / IS / EL / ES / FR / HR / IT / CY / LV / LT / LU / HU / MT / NL / NO / AT / PL / PT / RO / SI / SK / FI / SE
Formycon AG
Tel/Tél/Тел./Tlf/Τηλ/Sími/Puh: + 49 89 864 667 100

Deutschland
ratiopharm GmbH
Tel: +49 731 402 02

This leaflet was last revised in .

Detailed information on this medicine is available on the European Medicines Agency web site: https://www.ema.europa.eu/.

Instructions for administration

At the start of treatment, your healthcare provider will assist you with your first injection. However, you and your doctor may decide that you may inject Fymskina yourself. If this happens, you will get training on how to inject Fymskina. Talk to your doctor if you have any questions about giving yourself an injection. In children 6 years and older, it is recommended that Fymskina be administered by a healthcare provider or a caregiver after proper training.

- Do not mix Fymskina with other liquids for injection
- Do not shake Fymskina pre-filled syringes. This is because strong shaking may damage the medicine. Do not use the medicine if it has been shaken strongly.

Figure 1 shows what the pre-filled syringe looks like.

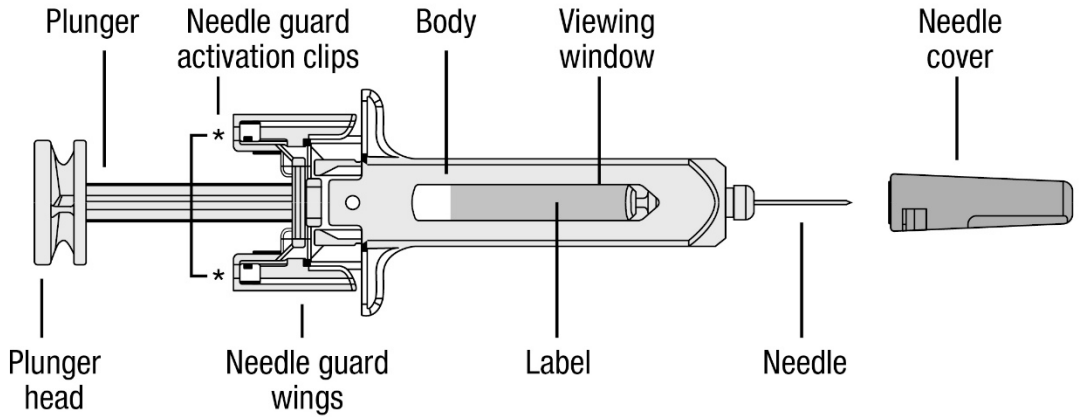

Figure 1

1. Check the number of pre-filled syringes and prepare the materials:

Preparing for use of the pre-filled syringe

- Take the pre-filled syringe(s) out of the refrigerator. Let the pre-filled syringe stand outside the box for about half an hour. This will let the liquid come to a comfortable temperature for injection (room temperature). Do not remove the syringe's needle cover while allowing it to reach room temperature
- Hold the pre-filled syringe by the body of the syringe with the covered needle pointing upward
- Do not hold by the plunger head, plunger, needle guard wings, or needle cover
- Do not pull back on the plunger at any time
- Do not remove the needle cover from the pre-filled syringe until instructed to do so
- Do not touch the needle guard activation clips (as indicated by asterisks * in Figure 1) to prevent prematurely covering the needle with the needle guard.
- Do not use the pre-filled syringe if it is dropped onto a hard surface.

Check the pre-filled syringe(s) to make sure

- the number of pre-filled syringes and strength is correct
    - If your dose is 45 mg you will get one 45 mg pre-filled syringe of Fymskina
    - If your dose is 90 mg you will get two 45 mg pre-filled syringes of Fymskina and you will need to give yourself two injections. Choose two different sites for these injections (e.g. one injection in the right thigh and the other injection in the left thigh), and give the injections one right after the other.
- it is the right medicine
- it has not passed its expiry date
- the pre-filled syringe is not damaged
- the solution in the pre-filled syringe is clear to slightly opalescent, colourless to slightly brown-yellow
- the solution in the pre-filled syringe is not discoloured or cloudy and does not contain any foreign particles

- the solution in the pre-filled syringe is not frozen.

Get everything together that you need and lay out on a clean surface. This includes antiseptic wipes, a cotton ball or gauze, and a sharps container.

2. Choose and prepare the injection site:

Choose an injection site (see Figure 2)

- Fymskina is given by injection under the skin (subcutaneously)
- Good places for the injection are the upper thigh or around the belly (abdomen) at least 5 cm away from the navel (belly button)
- If possible, do not use areas of skin that show signs of psoriasis
- If someone will assist in giving you the injection, then he or she may also choose the upper arms as an injection site

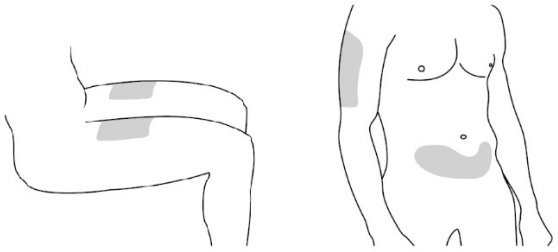

Figure 2: Areas in grey are recommended injection sites

Prepare the injection site

- Wash your hands very well with soap and warm water
- Wipe the injection site on the skin with an antiseptic wipe
- **Do not** touch this area again before giving the injection

3. Remove the needle cover (see Figure 3):

- The needle cover should **not** be removed until you are ready to inject the dose
- Pick up the pre-filled syringe, hold the body of the syringe with one hand
- Pull the needle cover straight off and throw it away. Do not touch the plunger while you do this

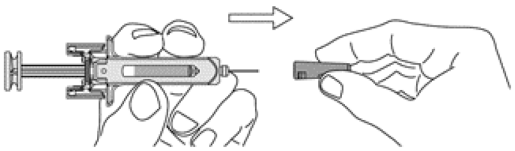

Figure 3

- You may notice an air bubble in the pre-filled syringe or a drop of liquid at the end of the needle. These are both normal and do not need to be removed
- Do not touch the needle or allow it to touch any surface
- Do not use the pre-filled syringe if it is dropped without the needle cover in place. If this happens, please contact your doctor or pharmacist
- Inject the dose promptly after removing the needle cover.

4. Inject the dose:

- Hold the pre-filled syringe with one hand between the middle and index fingers and place the thumb on top of the plunger head and use the other hand to gently pinch the cleaned skin

between your thumb and index finger. Do not squeeze it tightly

- Do not pull back on the plunger at any time
- In a single and swift motion, insert the needle through the skin as far as it will go (see Figure 4)



Figure 4

- Inject all of the medication by pushing in the plunger until the plunger head is completely between the needle guard wings (see Figure 5)

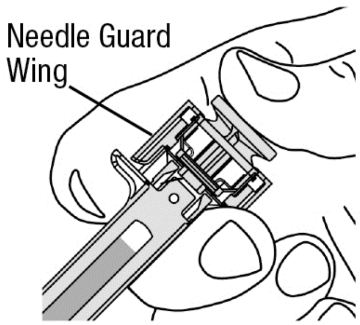

Figure 5

- When the plunger is pushed as far as it will go, continue to keep the pressure on the plunger head, take out the needle and let go of the skin (see Figure 6)

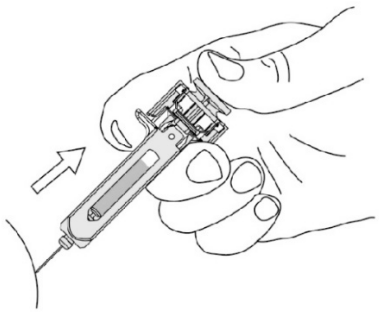

Figure 6

- Slowly take your thumb off the plunger head to allow the empty syringe to move up until the entire needle is covered by the needle guard, as shown by Figure 7:

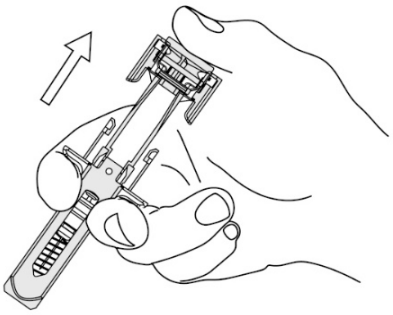

Figure 7

5. After the injection:

- Press an antiseptic wipe over the injection site for a few seconds after the injection.
- There may be a small amount of blood or liquid at the injection site. This is normal.
- You can press a cotton ball or gauze over the injection site and hold for 10 seconds.
- Do not rub the skin at the injection site. You may cover the injection site with a small adhesive bandage, if necessary.

6. Disposal:

- Used syringes should be placed in a puncture-resistant container, like a sharps container (see Figure 8). Never re-use a syringe, for your safety and health and for the safety of others. Dispose of your sharps container according to your local regulations
- Antiseptic wipes and other supplies can be disposed of in your garbage.



Figure 8